CARBON LIMITS

Greenhouse gas emissions from biogas production from manure in Norwegian agriculture

Technical description of the revised model

Project for Miljødirektoratet

M-1849|2020



Contents:

Abstract **3**
Terms and abbreviations **4**
1. Introduction **5**
1.1 Aim of the project 5
1.2 Growth of farm-fed anaerobic digestion 5
1.3 Sources of emissions from the use of manure for anaerobic digestion 6
2. Calculation of emissions **9**
Overall approach 9
Step 1 11
Step 2 12
Step 3 13
Step 4 13
Step 5 14
Step 6 14
Step 7 14
Step 8 14
Step 9 15
2.1 Uncertainty 15
Emission factor uncertainties 15
Activity data uncertainties 15
3. References **16**
Annex I. Updates introduced to the model in 2020 ..... **18**

Abstract

Manure management in Norway is a source of emissions to air of greenhouse gases (GHGs), specifically methane (CH_4) and nitrous oxide (N_2O), in addition to other nitrogen species such as ammonia (NH_3), nitric oxide (NO) and nitrogen (in the form of N_2). The volume of emissions of these GHGs and nitrogen species will depend on a number of factors such as type of animal, carbon and nitrogen content in fodder, manure management system, climate, time of spreading of manure and cultivation practices. All of these parameters need to be taken into consideration when building a model to calculate emissions of methane, nitrous oxide ammonia and potentially other nitrogen species.

A revised excel model for calculating methane emissions from manure management practices in Norway was developed in 2019 with minor updates in 2020. The model built on the previously used model, as well as current international research focused on methane emissions from use of manure in anaerobic digestion. The model allows emissions of methane to be calculated for all farm-based manure management systems (MMS), including (i) storage of manure which is to be spread to land, (ii) potential manure treatment by anaerobic digestion (with some pre-storage of manure and storage of digestate) and (iii) grazing on pasture land.

The calculation of methane emissions is divided into 9 steps, which correlate to storage prior to either (i) spreading of manure onto land, or (ii) anaerobic digestion and digestate treatment and storage.

In the revised model, the IPCC Tier 2 method has been applied for all animal categories, allowing for use of updated national MCF for liquid manure and the specific MMS distribution for each animal category in Norway, and results in a more consistent approach to estimation of CH_4 emissions from manure management systems, as well as better reflects the national manure management practices applied.

This report describes updated methodology implemented in the tool. A description of the values of the different variables used in the estimates and the resulting emissions will be found in the annual Norwegian submission to UNFCCC (National Inventory Report (NIR) and CRF-tables, 2020 version in preparation).

Terms and abbreviations

AD	Anaerobic Digestion
B_0	Maximum methane producing capacity for manure
EF	Emission factor
GHG	Greenhouse gases
IPCC	Intergovernmental Panel on Climate Change
MCF	Methane conversion factor
MMS	Manure management system
NIR	National Inventory Report
NO	Nitric oxide
NH_3	Ammonia
NO_2	Nitrous oxide
NOx	Nitrogen oxides
SSB	Statistisk sentralbyrå (Statistics Norway)
VS	Volatile solids

1. Introduction

1.1 Aim of the project

The aim of the project was to develop a revised methodology and accompanying model for calculating the agricultural methane emissions to atmosphere from farm level manure management systems (MMS). Emissions from manure management are expected to originate from the following separate processes: (i) traditional manure management (including housing, storage and spreading of manure to land), and (ii) use of manure for biogas production either at farm-scale facilities, or centrally. In addition, in the context of this project, grazing has also been considered as a separate MMS category. For this project therefore, MMS is considered to include:

1. storage of manure which is to be spread to land;
2. potential manure treatment by anaerobic digestion (with some pre-storage of manure prior to the digestion process and storage of digestate);
3. grazing on pasture land.

The revised methodology determines what activity data and emission factors are to be used in order to account for emissions from farm-based MMS.

The model therefore allows emissions of methane to be calculated for all farm-based MMS which include the three components listed above. Although the model calculates the quantity of manure which goes to anaerobic digestion at centralized facilities, it does not calculate emissions from AD at centralized facilities as these are calculated as part of the waste sector emissions[1].

1.2 Growth of farm-fed anaerobic digestion

Anaerobic digestion of animal manure is a treatment solution which is gaining popularity on a global scale as a means to reduce emissions to air and water, to recycle and return materials more efficiently into the farming systems and to provide a source of renewable energy. The market for farm-level anaerobic digestion plants has grown steadily. For example, the number of farm-fed anaerobic digestion (AD) plants in the US grew from less than 30 in 2000 to over 250 in 2016[2]. In the UK, the number of new farm-fed AD plants grew significantly between 2008 and 2014, from less than 5 new plants in 2008 to just less than 80 in 2014 (although annual growth in 2015 to 2017 was slowed)[3].

In Norway, there are only a few farm-fed AD plants, and their capacity is about 1% of the theoretical potential for manure (Pettersen et al. 2017, Lyng. 2018). Given the national target of the utilisation of 30% of manure from livestock for biogas production by 2020 (Landbruks- og Matdepartementet 2009), it is both required and expected that farm-fed AD in Norway should see significant growth in the

[1] The model does, however, take into account emissions from pre-storage of manure going for AD at centralized facilities, which takes place at the farms (emissions from storage of feedstock at a centralized facility, leakage of methane during AD, as well as storage of digestate are taken into account as part of waste sector emissions, together with other feedstocks co-digested at centralized plants).

[2] US EPA, 2017: "Anaerobic Digestion Trends and Successes in the US – EPA", https://www.epa.gov/sites/production/files/2017-11/documents/anaerobic-digestion-trends-and-successes-in-the-us_elger.pdf (last accessed 16 January 2019)

[3] Savills World Research, 2018: Farm Anaerobic Digestion: Growth and Performance, https://pdf.euro.savills.co.uk/uk/rural---other/spotlight---farm-anaerobic-digestion---growth-and-performance---2018.pdf (last accessed 16 January 2019)

coming years. It is therefore important to ensure that Norway develops an effective emission accounting system which integrates the prospective growth in farm-fed AD facilities in the country.

Three main phases of handling and treatment of manure for processing at farm-scale or centralized anaerobic digestion facilities are covered by the methodology:

- Storage of manure which is to be processed at an anaerobic digestion facility (pre-storage);
- Production of biogas from an AD reactor (including effects of any potential pre-treatment of the manure and/or treatment of the digestate);
- Storage of digestate prior to application to land.

1.3 Sources of emissions from the use of manure for anaerobic digestion

In general, the model covers three main phases of handling and treatment of manure for processing at AD facilities (see section 1.1). These three stages, however, were further reviewed and divided into more detailed steps to ensure both greater accuracy of the results and to "future-proof" the model and allow prospective manure and digestate management practices in Norway to be readily integrated into upcoming annual emission reports. As a result of this review it was concluded that the model would divide the handling and treatment of manure into the following steps:

1. Pre-storage of manure for AD

This stage includes all animal manure which is stored on farms prior to being sent to the AD plant (typically between few days up to 1-2 months), irrespective of whether anaerobic digestion takes place locally (at the farm) or at a centralized facility.

2. Manure pre-treatment options

A number of pre-treatment processes are available which aim to enhance biogas production. Examples of these include:

- **Mechanical pre-treatment:** Maceration, sonication and high-pressure homogenizer (HPH)
- **Thermal pre-treatment:** can be grouped into two, temperatures between 70 and 121°C (20-30% enhancement in biogas yield) and 160-180°C (up to 100% enhancement)
- **Chemical pre-treatment:** breakdown of organic constituents through the action of acids, alkali and oxidants
- **Combined pre-treatment:** combination of physical (mechanical, thermal) with chemical (acid, alkali), combined effects result in better sludge solubilization
- **Biological pre-treatment:** different microbial systems work synergistically in hydrolyzing complex organic matter thereby improving anaerobic digestion

Although application of these pre-treatment processes is currently limited, particularly in Norway, including this option in the original design of the model will ensure it remains relevant if and when these processes become more commonplace. It is expected that the pre-treatment options themselves will not directly result in emissions of methane, ammonia, nitrous oxide or other nitrogen species, due to the fact that the above listed pre-treatment processes are undertaken in fully enclosed reactors. These pre-treatment processes are, however, expected to lead to higher biogas yields in the downstream AD reactor, which may therefore impact downstream emissions (e.g. from leakage of the digester or storage of digestate).

3. Anaerobic digestion

The anaerobic digestion phase is undertaken in a reactor which is used to generate biogas from liquid or solid waste. The digester is covered or encapsulated to enable biogas capture for flaring, heat and/or power generation or feeding biogas into a natural gas network. Farm-scale anaerobic digesters can range from simple covered lagoon systems to factory pre-fabricated turn-key installations. It is expected that in Norway the majority of new installations will be high rate digesters, such as continuously stirred tank reactors (CSTR), plug-flow reactors and up-flow anaerobic sludge blanket (UASB) reactors.

By generating and collecting biogas for further use, the AD phase should significantly reduce emissions of methane from the handling of animal manure compared to a baseline scenario where the manure is stored and applied to land without treatment. The anaerobic digester, however, can give rise to methane emissions during maintenance of the digester, physical leaks through the roof and side walls, release through safety valves due to excess pressure in the digester, and, if applicable, during upgrading of the gas. All these losses of CH_4 to atmosphere need to be accounted for.

4. Digestate treatment

The digestate resulting from the AD phase may have a high water content (over 90%) which in turn leads to high handling costs. Treatment of the digestate leading to separation of the water phase and concentration of nutrients facilitates digestate handling. Treatment of the digestate may also be required in livestock intensive areas where accumulation of high levels of nutrients (e.g. nitrates and phosphates) may restrict application of digestate which could otherwise overload the land and contribute to leaching and eutrophication (Dahlin et al., 2015). In these cases, separating the organic content from the nutrient fraction may be beneficial.

There are two main treatment options for digestate (Eriksson and Runevad, 2015). Partial treatment reduces the limiting factors for land application (e.g. concentration of nutrient or heavy metals). Partial treatment would not reduce the total handling volume but could in some cases greatly reduce transportation costs. Another treatment option is complete treatment, where each fraction from solid-liquid separation can be post-treated to facilitate handling or increase market value. Depending on the desired end-product, partial, complete or variations of treatments can be applied (Figure 1).

Digestate treatment may itself lead to emissions (in particular of NH_3), and may also impact the source, nature and volume of emissions during storage of digestate. Partial treatment (with possibility of producing liquid and solid digestate, as well as unseparated digestate) option is implemented in the model. Different storage options can be selected for the different digestate types, leading to different downstream methane emission levels (see section below). Due to relatively limited use of manure in biogas production in Norway today, these effects are difficult to capture with available data (but it is expected to be possible in the future with growth of use of manure for AD).

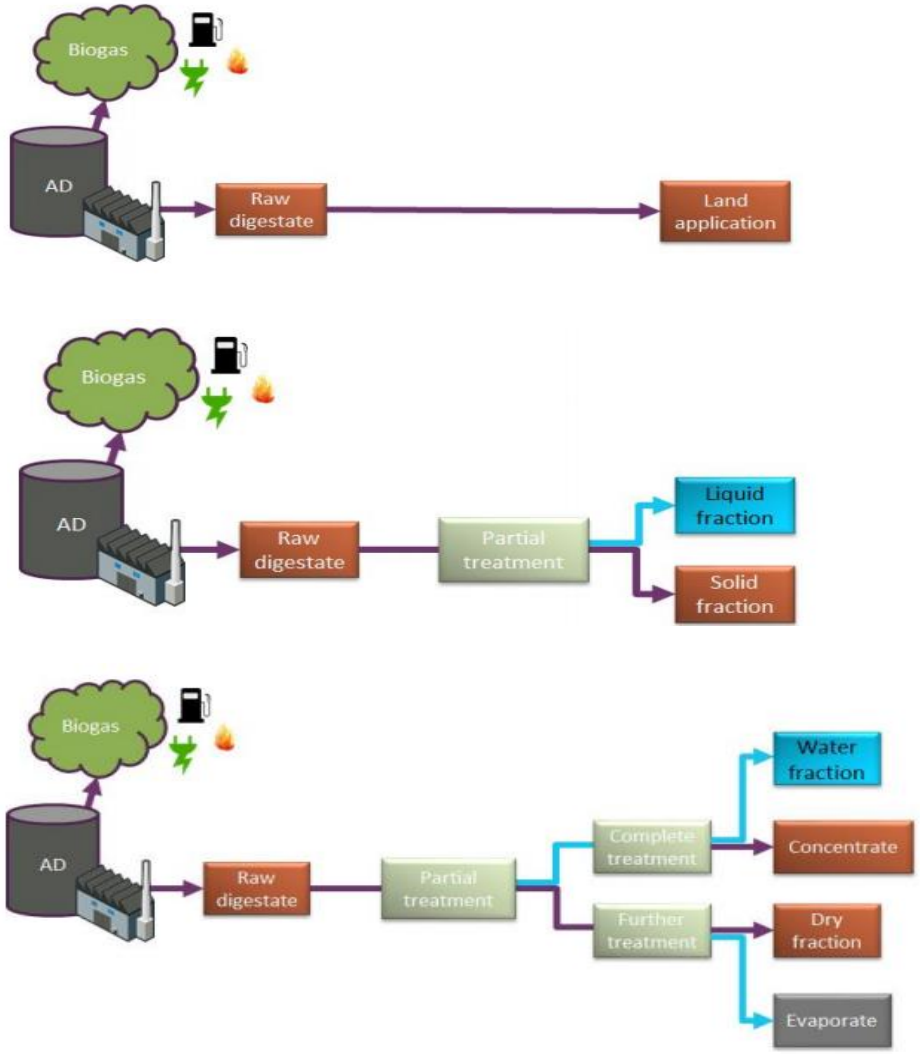

No treatment

Partial treatment: Digestate can be partially treated with simple techniques such as mechanical, solid liquid separation (belt filter press, screw press and decanter centrifuge)

Complete treatment: Each fraction from solid liquid separation can be post-treated to facilitate handling or increase market value

Figure 1: Schematic of different options for treatment of digestate (source: Eriksson and Runevad, 2015)

5. Storage of digestate

The nature of the digestate resulting from the AD phase is dependent on the anaerobic reactor technology and the type of treatment applied, if any. From CSTR type digesters, the digestate is in a liquid form and can be discharged into an existing slurry storage tank or lagoon (Lukehurst and Bywater, 2015). In contrast, digestate from digesters designed to process high total solids feedstocks is more like compost. Digestate does not form a natural crust like raw slurry and therefore fixed or flexible tank/lagoon covers should be used in order to limit emissions, in particular of ammonia. Where full covers are not feasible, a floating cover of lightweight expanded clay aggregates such as LECA pebbles can also be used, but these can be less effective. The type of post-storage system used, and in particular the nature of the covering, will impact emissions and these are integrated into the accounting model (different storage options can be selected depending on the digestate type – solid, liquid or unseparated).

2. Calculation of emissions

A stepwise approach had been adopted for calculation of methane emissions, which offers a high level of transparency and detail. The nature of each step in the calculation is described in the sections below.

Overall approach

In the revised model, the IPCC Tier 2 method has been applied for estimation of methane manure management emissions from all animal categories, allowing for use of updated national MCF for liquid manure and the specific MMS distribution for each animal category in Norway (based on manure surveys). Emissions have been calculated using the following formula:

$$kg\ CH_4\ emissions = Number\ of\ animals * kg\ VS\ /\ animal\ /\ year * B_0 * 0.67 * \Sigma\ MCF_i * MMS_i$$

where

VS is volatile solids, the organic material in livestock manure and consist of both biodegradable and nonbiodegradable fractions, in *tonnes/year*
B_0 is the maximum methane producing capacity for manure, in $m^3\ CH_4$ *per kg VS excreted*
MCF is a system-specific parameter that reflects the portion of B_0 that is achieved, in *%*,
and *MMS* stands for manure management system (including manure storage types, anaerobic digestion, grazing, etc.), in *%*

B_0 and VS excretion rates for these animal categories were based on a national study, where the values were either calculated using the IPCC 2006 Guidelines or assessed using expert judgement (Morken, 2013[4]). The specific values used for all parameters in the above formula are provided in Norway's National Inventory Report 2020 (NIR)[5]. Overall, the use of the Tier 2 method in the updated model results in a more consistent approach to estimation of CH_4 emissions from manure management systems in Norway, as well as better reflects the national manure management practices applied.

Methane emissions from anaerobic digestion of animal manure are to be calculated based on IPCC 2006 guidelines. As highlighted by Rösemann et al. (2017), and CITEPA (2018), however, the methodology presented in IPCC 2006 for calculation of methane emissions from AD would lead to an increase in emissions of methane, which is considered unlikely, and would only be true if the biogas was not captured and used, which is the goal of an AD facility (CITEPA 2018). Both Rösemann et al. (2017) and CITEPA (2018) therefore propose alternative methodologies for estimating methane emissions from AD of animal manure. For the purposes of the Norwegian model, the methodology used is primarily based on that adopted by Rösemann et al. (2017) for calculations of emissions from German agriculture. It should be noted that the methodology adopted by Rösemann et al. is considered to be consistent with the IPCC 2019 "Refinement to the 2006 IPCC Guidelines for National Greenhouse Gas Inventories". In the Norwegian model emissions are estimated for the three main phases of manure treatment by AD, namely storage prior to AD (pre-storage), digestion (including pre-treatment) and treatment and storage of digestate.

[4] Morken (2013) Revision of the Norwegian model for estimating methane emission from manure management
[5] The latest version of the NIR is in preparation and will be available in 2021.

The calculation of methane emissions is divided into 9 steps, as summarised in Table 1 and Figure 2, which also highlight which steps correlate to storage and pre-treatment, anaerobic digestion and digestate treatment and storage.

Table 1: Summary of steps in the calculation of methane emissions

Treatment phase	**Step no.**	**Description**
Pre-storage	1	Amount of volatile solids entering storage
	2	Emissions of methane from manure management (including storage of manure spread to land, grazing, pre-storage of manure used for AD)
Pre-treatment and digestion	3	Methane potential of the manure after pre-storage
	4	Manure pre-treatment options
	5	Emissions of methane from anaerobic digestion
Treatment and storage of digestate	6	Methane potential of the digestate after AD
	7	Digestate treatment options
	8	Emissions of methane from storage of digestate
	9	Summary of all emissions of CH_4 from manure management

Figure 2: Summary of the stepwise approach for estimating methane emissions

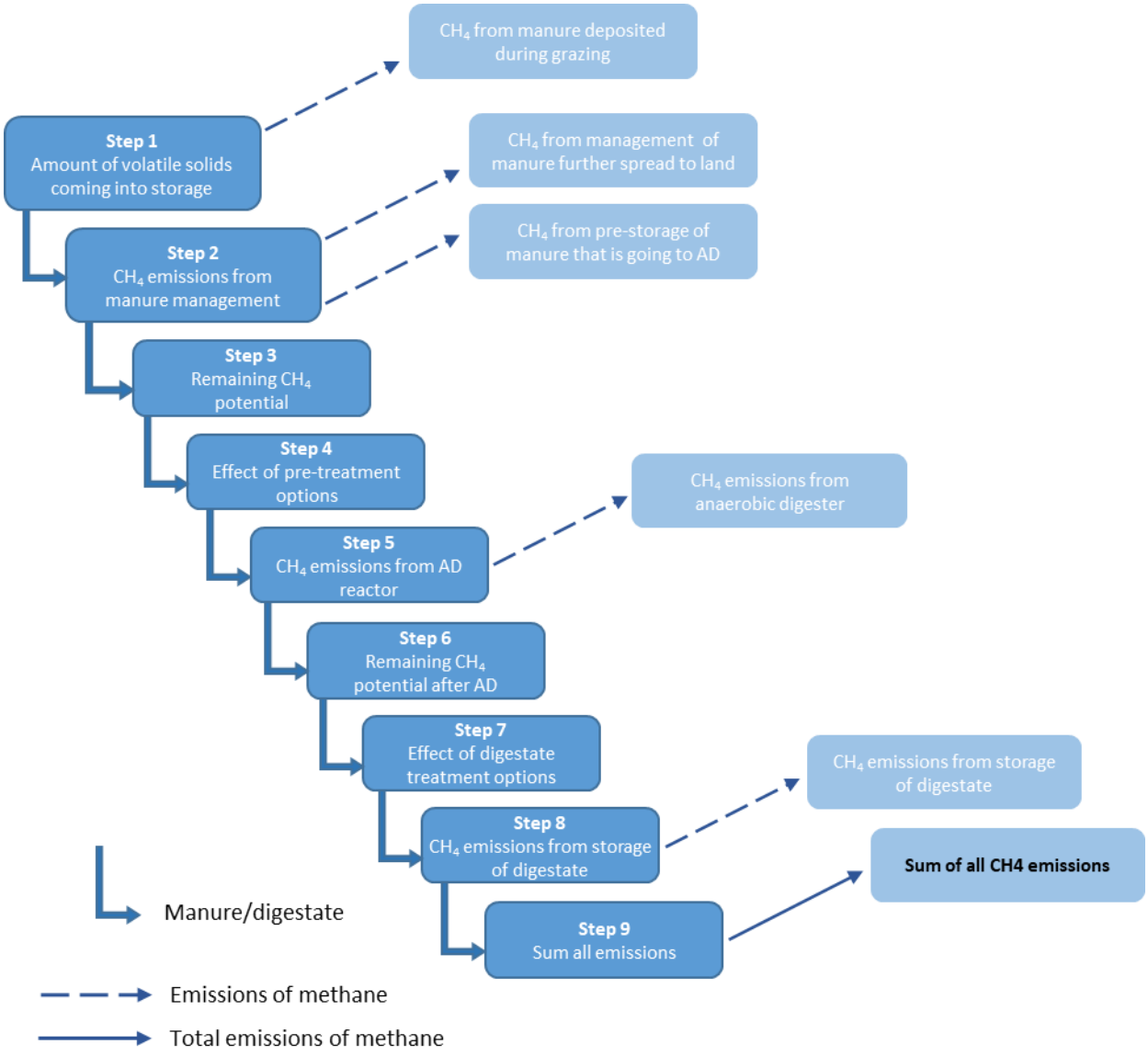

A more detailed description of each of the nine steps is provided below.

Step 1

Objective for step 1: Determine the amount of volatile solids entering the storage

Under this step, the amount of volatile solids (VS) entering the manure storage step, both for storage prior to AD and for storage of manure for application to land without treatment (i.e. without AD) is determined for all animal categories.

The amount of VS for each animal category is estimated on a separate sheet in the model ("VS") as different calculation approaches are used for different animal categories, as well as a longer list of animals (and corresponding activity data) is applied to improve the quality of the data. For cattle, values for volatile solids per animal are available (from other SSB models), whereas for swine, poultry

and sheep, volatile solids are estimated as a percentage of manure dry matter (also estimated in separate SSB model). The final output from the VS sheet is the total amount of volatile solids (in tonnes) per animal category. The total amount of VS for each animal category is further divided into the three manure types (slurry, deep litter and solid manure).

This step also determines the total amount of VS for each animal category in manure which is deposited during grazing (where applicable), and based on this calculation, the emission of methane from manure deposited during grazing. Emissions from grazing have been estimated as a separate MMS category for all animal categories to take into account analysis from Cai et al. (2017) that indicates that there was no significant difference in emission values for different animal categories regardless of the method of representing methane emissions or the climate zone. Thus, a single set of B_0 and MCF factors has been applied to all animal categories.

The output from this step the total VS in manure which enters storage for all animal category divided into three manure types (slurry, deep litter and solid manure), plus the total VS in manure which is deposited to land during grazing and resulting methane emissions from grazing.

Step 2

Objective for step 2: Determine the emissions of methane from storage prior to application to land or prior to anaerobic digestion

Step 2 determines the emissions from storage of manure that is further spread to land, as well as emissions from pre-storage of manure that is going to anaerobic digestion either at the farm or at an off-site facility.

For this step, the B_0[6] rates for each animal category are entered, as is the proportion of manure by type (slurry, deep litter and solid manure) and by its downstream fate (i.e. spread to land, AD at the farm, AD at an off-farm/centralized facility). The methane conversion factor[7] (MCF) of the manure for each animal category and storage type (open or closed tank, solid storage directly on the ground, etc.) is also entered at this step, again divided by manure type and downstream fate of the manure, if relevant. The share of manure by animal category, manure type, storage type and downstream fate of the manure is also entered during step 2. The detailed data entered into the various tables under this step is then used to calculate methane emissions by animal category, manure type and downstream fate of the manure, and also by manure management system (MMS), according to the formula outlined in “Overall approach” section.

A separate calculation sheet, is implemented to allow for calculation of national methane conversion factors for slurry, which take into account the local temperature differences and various retention times (i.e. manure stored for application to land will have a longer retention time than manure used for anaerobic digestion). The MCF module has been developed using methodology outlined by Andrew Vander Zaag (2018). It takes into account average annual temperatures in various regions of Norway, as well as the relative share of manure deposited in each of the regions (to estimate weighted average national MCF). In addition, it takes into account the frequency of manure removal from storage (on monthly scale). As more information becomes available about the average storage duration of manure in different regions, the estimates of the national MCF can be updated.

[6] See definition of B_0 above in the description of the overall approach.

[7] See definition of MCF above in the description of the overall approach.

After a weighted average unabated MCF for liquid slurry has been developed, assumptions on emission reduction efficiency of different types of storage covers were made based on expert opinion and recommendations from the IPCC 2019 Refinement[8] to derive MCFs for the specific storage categories listed below:

- Manure cellar, under slatted floor
- Manure cellar, under solid floor
- Open manure tank for slurry (unabated)
- Manure tank with tight roof
- Manure tank with artificial floating cover (plastic sheeting, LECA balls)
- Manure tank with floating cover (natural crust or cover with straw)

MCFs for the following storage categories were based on default IPCC factors. In addition, MCFs for poultry were also based on the default IPCC factors.

- Indoor built up/deep litter
- Outdoors built up/deep litter
- Solid manure, outdoor storage

Methane emissions are calculated according to equation 10.23 of the IPCC Guidelines for National Greenhouse Gas Inventories (2006), also presented above in “Overall approach” section.

The output from this is a breakdown of CH_4 emissions from storage (pre-storage) for manure which is further spread to land or sent for AD at the farm or sent for AD at an off-farm/centralized facility.

From the following step onwards, only the manure that is used for anaerobic digestion at the farm level is considered (although calculations for manure used for anaerobic digestion at centralized facilities are also performed for all of the steps in the model and results can be observed, they are not taken into account for emissions reporting from manure management, but are rather accounted for as part of the waste sector).

Step 3

Objective for step 3: Estimate the methane potential of the manure after pre-storage (AD only)

The CH_4 losses from the pre-storage as calculated in the previous step reduce the CH_4 production potential in the AD reactor (including the pre-treatment) and the storage of the digestate. Based on Rösemann et al. (2017), this is taken into account by modifying the IPCC (2000) Formula 1.

Step 4

Objective for step 4: Estimate effect of various pre-treatment options on the overall methane potential of the manure going to the AD reactor (AD only)

[8] New information suggests that a solid cover reduces CH_4 emissions by 25 to 50% (range: 0 to 90%): Amon et al. (2006), Amon et al. (2007); Clemens et al. (2006); Guarino et al. (2006), Matulaitis et al. (2015), Misselbrook et al. (2016), VanderZaag et al. (2009), Hou et al. (2015), VanderZaag et al. (2008). A reduction of 40% due to crust cover may be applied only when a thick, dry, crust is present. Thick dry crusts occur in systems in which organic bedding is used in the barn and is allowed to be flushed into the liquid storage tank and solids are not separated from the manure stream and further the surface is not exposed to regular heavy precipitation that may disrupt the surface: Aguerre et al. (2012); Nielsen et al. (2013); VanderZaag et al. (2008).

Although the pre-treatment options themselves will not directly result in emissions of methane, they are expected to lead to higher biogas yields in the downstream AD reactor, which may therefore impact downstream methane emissions. This impact on downstream methane emissions is reflected by a correction factor (which is expected to be > 1) specific to each different pre-treatment option, which is to be applied to the methane potential calculated as a result of step 3.

The output from this step is a corrected MCF which reflects the impact of pre-treatment of the manure on the biogas yields in the downstream AD reactor.

Step 5

Objective for step 5: Estimate emissions from the AD reactor (AD only)

During this step, the amount of methane produced by the AD reactor is calculated based on equation 10.23 of the IPCC Guidelines for National Greenhouse Gas Inventories (2006), where VS is multiplied by B_0 and MCF adjusted after previous steps in order to determine the CH_4 emission factors. As described by Rösemann et al. (2017), however, the residence time necessary to fully exploit the maximum possible methane production B_0 is, in practice, not reached in the AD reactor. This is taken into account at this stage by introducing the parameter μ_{rg} (the "relative potential of residual gas") which describes the amount of gas that can still be purged from the digestate following AD, and this amount of gas is subtracted from the total potential methane production by the AD reactor. This final figure is multiplied by the leakage rate of the AD reactor to estimate emissions of CH_4 from the latter. Documented measurement of methane leakage rate of one of the largest biogas plants in Norway of 2.9% is used as a default for all manure used in AD (REALTEK, 2017).

The output from this step is the emissions of methane from the AD reactor.

Step 6

Objective for step 6: Estimate the methane potential of the digestate after anaerobic digestion (AD only)

The CH_4 losses from the anaerobic digestion phase as calculated in step 5 (as well as the biogas production itself) significantly reduce the CH_4 production potential of the digestate. At this stage, the CH_4 production potential of the digestate is described by the parameter μ_{rg} (the "relative potential of residual gas") as introduced in step 5. Under step 6, μ_{rg} is multiplied by the MCF of the manure stored prior to AD (by animal category, manure type and by storage type).

Step 7

Objective for step 7: Estimate effect of various digestate treatment options on the overall methane potential of the digestate prior to storage (AD only)

As for the pre-treatment options, the digestate treatment options themselves are not expected to directly result in emissions of methane, but they may impact methane emissions in the downstream digestate storage (for example, due to different storage practices applied to different types of digestate). This impact on downstream methane emissions is reflected by a correction factor (which is expected to be > 1) specific to each different digestate treatment option, which is to be applied to the MCF calculated as a result of step 6.

The output from this step is a corrected MCF which reflects the impact of digestate treatment on the methane emissions in the downstream digestate storage.

Step 8

Objective for step 8: Estimate emissions of methane from storage of digestate (AD only)

The MCF calculated under step 7 is multiplied by the VS and B_0 of the digestate in order to estimate emissions of methane from storage of digestate by animal category and digestate type (liquid, solid or untreated/unseparated digestate), and by storage type. The possible storage types include;

- Open tank for digestate (unabated)
- Digestate tank with tight roof
- Digestate tank with artificial floating cover (plastic sheeting, LECA balls)
- Digestate tank with floating cover (natural crust or cover with straw)
- Solid digestate, indoor storage
- Solid digestate, outdoor storage

Step 9
Objective for step 9: Summarize all emissions of methane from manure management

Under this final step a summary of all emissions of methane from manure management is presented, including:

- CH_4 emissions from storage of manure for further application to land (and from grazing)
- CH_4 emissions from pre-storage of manure sent to AD (farm-level)
- CH_4 emissions from pre-storage of manure going for AD (centralized facilities)
- CH_4 emissions from anaerobic digestion (farm-scale AD)
- CH_4 emissions from digestate storage (farm-scale AD)

2.1 Uncertainty

Emission factor uncertainties

The IPCC 2006 emission factors, based on Tier 2 for all animal categories, are considered to have the uncertainty range ±20 %. As stated in IPCC 2006, uncertainties can be reduced by developing and using MCF, B_0, and VS values that reflect country/region specific conditions. The values for B_0 for dairy cattle and all swine are country specific, and for these categories, uncertainty would therefore be expected to be lower than those given for the IPCC default values. Similarly, values for VS and MCF for many animal categories are country specific and would therefore be expected to be lower than those given for the IPCC default values.

Activity data uncertainties

The data for the number of animals is considered to be known within ±5 per cent. Other activity data are the different kinds of manure treatment (which will determine the emission factor), which have been assessed by expert judgments. This will contribute to the uncertainty.

3. References

Cai Y., Chang S.X., Cheng Y. (2017) Greenhouse gas emissions from excreta patches of grazing animals and their mitigation strategies. Earth-Science Reviews 171: 44-57.

Carbon Limits, 2018: Greenhouse gas emissions from biogas production from manure in Norwegian agriculture, report for Miljødirektoratet

Dahlin, J., Herbes, C., Nelles, M., 2015. Biogas digestate marketing: Qualitative insights into the supply side. Resour. Conserv. Recycl. 104, Part A, 152–161. doi:10.1016/j.resconrec.2015.08.013

Eriksson, L., Runevad, D., 2015: Evaluating digestate processing methods at Linköping biogas plant, Chemistry and Biology Master thesis, Linköping University

IPCC, 2006: Guidelines for National Greenhouse Gas Inventories

IPCC 2019, 2019 Refinement to the 2006 IPCC Guidelines for National Greenhouse Gas Inventories, Calvo Buendia, E., Tanabe, K., Kranjc, A., Baasansuren, J., Fukuda, M., Ngarize S., Kari-Anne Lyng, Mia Bjerkestrand, Aina Elstad Stensgård, Pieter Callewaert and Ole Jørgen Hanssen, 2018: Optimising Anaerobic Digestion of Manure Resources at a Regional Level, Sustainability 2018, 10, 286

Kolle, S. O. & Oguz-Alper, M., 2020: Bruk av gjødselressurser i jordbruket 2018. Metodebeskrivelse og resultater fra en utvalgsbasert undersøkelse (Use of inorganic and organic fertilisers in agriculture 2018), Reports 2020/09: Statistics Norway (SSB-Statistisk sentralbyrå) .

Landbruks- og Matdepartementet, 2009: Klimautfordringene—Landbruket en del av Løsningen; The Norwegian Department of Agriculture and food White Paper, St. meld. Nr. 39 (2008–2009); Landbruks- og Matdepartementet: Oslo, Norway.

Landbruksdirektoratet, 2020. Biogass - Levering av husdyrgjødsel til biogassanlegg - mengd levert, Available at: https://www.landbruksdirektoratet.no/no/statistikk/miljostatistikk/utslipp-til-luft

Lukehurst, C., Bywater, A., 2015: Exploring the viability of small scale anaerobic digesters in livestock farming, IEA Bioenergy

Lyng, K.A., 2018: Reduction of environmental impacts through optimisation of biogas value chains. Drivers, barriers and policy development, Norwegian University of Life Sciences Faculty of Environmental Sciences and Natural Resource Management

Pettersen, I., Grønlund, A., Stensgård, A.; Walland, F, 2017: Klimatiltak i Norsk Jordbruk og Matsektor Kostnadsanalyse av Fem Tiltak; NIBIO Rapport; NIBIO: Ås, Norway, 2017; Volume 3.

Ramirez Garcia, JM., Webb, J., Amon, B., Broomfield, B., Haenel, HD., Wulf, S., 2016: NFR 5.B.2 Biological treatment of waste – anaerobic digestion at biogas facilities, European Environment Agency, Guidebook 2016

REALTEK, 2017: Følgeforskning Greve Biogass – masse- og energibalanser, økonomi og klimanytte

Rivedal S., Prestvik A.S., Aune A., Hansen S., Morken J., 2019: Tiltak for å redusere ammoniakkutslepp frå jordbruket, NIBIO

Rösemann C, Haenel H-D, Dämmgen U, Freibauer A, Döring U, Wulf S, Eurich-Menden B, Döhler H, Schreiner C, Osterburg B, 2017: Calculations of gaseous and particulate emissions from German agriculture 1990 – 2015 : Report on methods and data (RMD) Submission 2017. Thünen Rep 46

Vander Zaag, A., 2018: MCF Calculations and Example Spreadsheet

Annex I. Updates introduced to the model in 2020

A revision of the tool has been performed in 2020, in order to identify any potential areas of improvement, in light with updated international guidelines and newly available national data.

The following changes have been introduced to the model:

- MCF for storage of swine manure in (i) manure tank with tight roof and (ii) manure tank with artificial floating cover (e.g. plastic sheeting) has been changed to reflect the assumption that no natural crust will be formed for swine manure, even if manure is covered. The comparison of the previously used factors and the updated ones is presented below:

MCF for swine manure, in %	**Manure tank with tight roof**	**Manure tank with artificial floating cover**
Previous model	9%	9%
Updated model	15%	15%

- Real activity data on use of manure for anaerobic digestion (AD) was used to estimate the share of volatile solids that are used for biogas production from the different animal species. The total amount of manure used for biogas production is split between that used by farmers directly at farm-scale facilities and at centralized facilities (where manure is co-digested with other organic feedstocks). The methane model accounts for emissions from pre-storage of digestate, the digestion process and from storage of digestate irrespective of the type of facility the manure is processed at. However, for reporting purposes, only emissions from pre-storage of manure (used for spreading to land without treatment, as well as for AD at farm-scale and centralized plants) and digestion/storage of digestate at farm-scale facilities are used. This is to ensure that emissions from large co-digestion plants are not double-counted: there are other models that estimate and report methane emissions from centralized anaerobic digestion (these emissions are reported under “Waste” category in the Norwegian GHG accounting system).
- The amount of manure used for biogas production in 2019 still remains very modest, representing about 1 – 1.5% of the total volatile solids in all manure deposited in housing (only cattle and swine manure is currently used for AD in Norway).
  The analysis is based on the data from the Norwegian Agriculture Agency (https://www.landbruksdirektoratet.no/no/statistikk/miljostatistikk/utslipp-til-luft):

Tonnes manure used for biogas production

Year	Centralized biogas plants	Farm-scale biogas	**TOTAL**
2013	0	3 178	3 178
2014	0	2 926	2 926
2015	15 003	7 512	22 515
2016	56 040	5 583	61 623
2017	63 643	6 989	70 632

2018	62 068	6 819	68 887
2019	73 297	10 890	84 187

During the review of the model, the need for further assessment of MCF for different manure management types used in Norway has also been identified, including MCFs for digestate. In particular, as highlighted in Rivedal S. et al (2019), it could be important to investigate further the conditions for crust formation and its properties under each storage type. This work is planned to be carried out in the future and might impact the values for methane emission factors currently used in the model.

In addition, the following changes were introduced to activity data on manure management systems (MMS) in 2020 that led to changes in the overall estimates of emissions[9]:

- The activity data was updated with final figures from Statistics Norway 2018 manure survey (Kolle & Oguz-Alper, 2020). The main differences were that data on MMS for horse and goat now became split between two animal categories. These two categories were earlier treated with the same manure distribution. The share of manure per storage type was changed for these categories, and led together with other updated information, to changes in methane emissions. The manure distribution for fur-bearing animals was also changed as a result of this update, since the same values for manure storage distribution as for horse-goat was used earlier. In updated model manure distribution for horse was used for fur-bearing animals.
- The updated MMS data from 2018 manure survey also gave changes in values for housing and storage practices for cattle and sheep
- Updated grazing data was also implemented in 2020. As a result, the amount of manure entering housing and storage also changed but had small impact on the total changes in methane from manure emissions.

[9] The updated activity data can be found in 2020 National Inventory Report (in preparation)